AMBER, the near-infrared/red VLTI focal instrument

R.G. PETROV [1], *F. MALBET* [2], *A. RICHICHI* [3], *K.-H. HOFMANN* [4]
[1] *Université de Nice – Sophia Antipolis, and, Département Fresnel, Observatoire de la Côte d'Azur, France (OCA)*
[2] *Laboratoire d'Astrophysique, Observatoire de Grenoble, France (LAOG)*
[3] *Osservatorio Astrofisico di Arcetri, Italy (OAA)*
[4] *Max-Planck Institut für Radioastronomie, Germany (MPIfR)*
Draft: May 14, 1998

Abstract

The near-infrared / red focal instrument of the VLTI, called AMBER will operate between 1 and 2.5 μm in a first phase (2001-2003) with two UTs. This instrument has been designed for three beams to be able to perform images through phase closure techniques. The wavelength coverage will be extended in a second phase down to 0.6 μm at the time the ATs become operational. The magnitude limit of AMBER is expected to reach $K = 20$ when a bright reference star is available and $K = 14$ otherwise. The main scientific objectives are the investigation at very high angular resolution of disks and jets around young stellar objects and AGN dust tori with a spectral resolution up to 10000.

1. Introduction

The interferometric mode of the VLT (VLTI) has always been present in the VLT project. In last Messenger issue (No 91, March 1998), the ESO Director General, Riccardo Giacconi, has presented the role of ESO in European Astronomy by stressing the important and unique scientific contribution expected from the VLTI. The VLTI implementation plan has been reviewed in 1995-96 by ISAC, the Interferometry Science Advisory Committee, who gave its recommendation to the ESO community in ESO Messenger 83 (March 1996). The committee recommended early operations of the VLTI as well as phased development that focuses in the infrared wavelength range (1-20 μm). A new plan has then been proposed by the ESO VLTI team with an updated timetable: operations with two 8-m unit telescopes (UTs) before the end of 2000, with two 1.8-m auxiliary telescopes (ATs) before the end of 2002 and the full equipment of 4 UTs and 3 ATs starting in 2003. In 1997, three instruments were proposed:

- AMBER, Astronomical Multi BEam combineR: a near infrared / red instrument [0.6 - 2.5 μm]. At this time, AMBER included adaptive optics.
- MIDI, MID-infrared Interferometric instrument: a thermal infrared instrument [10 - 20 μm].
- PRIMA, Phase Referencing Imaging and Micro-arcsecond Astrometry: an instrument based on the simultaneous operation of two fields.

On 14 April 1998, the VLTI Steering Committee recommended that ESO takes the lead to deliver a dual field and stabilized beams (adaptive optics and fringe tracking) in order to boost the performance of AMBER and MIDI as early as in 2001, much earlier than expected in the first version of the instrumentation plan.

AMBER intends to combine the main advantages of the interferometric instruments for which Europe has acquired experience: the FLUOR instrument [1, 2] and the GI2T interferometer [6].

This paper presents a preliminary report on AMBER, where we detail the science drivers, the concept, the expected performance and the overall project organization. The work presented here is the result from two preliminary working groups [4, 5] in addition to the AMBER present group [7].

2. Science objectives

Of course, a major role in the science operation of AMBER will be played by the limiting magnitude that the system will permit (see Sect. 4). With such sensitivities, there is a wealth of scientific issues that AMBER will allow us to tackle. Within the project, it has been decided that at least at an initial phase the instrument should be dedicated to relatively few topics. An investigation based on criteria of feasibility on one side, and strong interest in the scientific community on the other side, has resulted in a few selected areas which are listed, with a list of typical parameters, in Table 1.

It is important to note that AMBER will allow us in principle to cover a wide range of scientific objectives including:

- the search of hot exoplanets
- the formation and evolution of stars
- extragalactic studies

which will be our first scientific targets. A detailed description of the scientific rationale behind these topics cannot be given in full here, but the reader is referred for instance to the proceedings of the workshops organized by ESO (*Science with the VLT*, Walsh & Danziger eds.; and *Science with the VLT Interferometer*, Paresce ed.).

3. Preliminary optical layout

Figure 1 shows a possible optical layout of AMBER which is mainly intended to illustrate the functions of the different modules of the instrument. Three parts must be distinguished. Firstly, each beam is processed independently (1 – 4 in the figure); then they are combined (5 – 8); and finally a spectrograph and a detector (9 – 13) analyze the combination focus. The figure represents a layout for three telescopes.

The incoming beams have their wavefronts corrected by low-mode adaptive optics modules provided by ESO for the UTs and by the AMBER consortium for visible wavelengths. The expected Strehl ratio

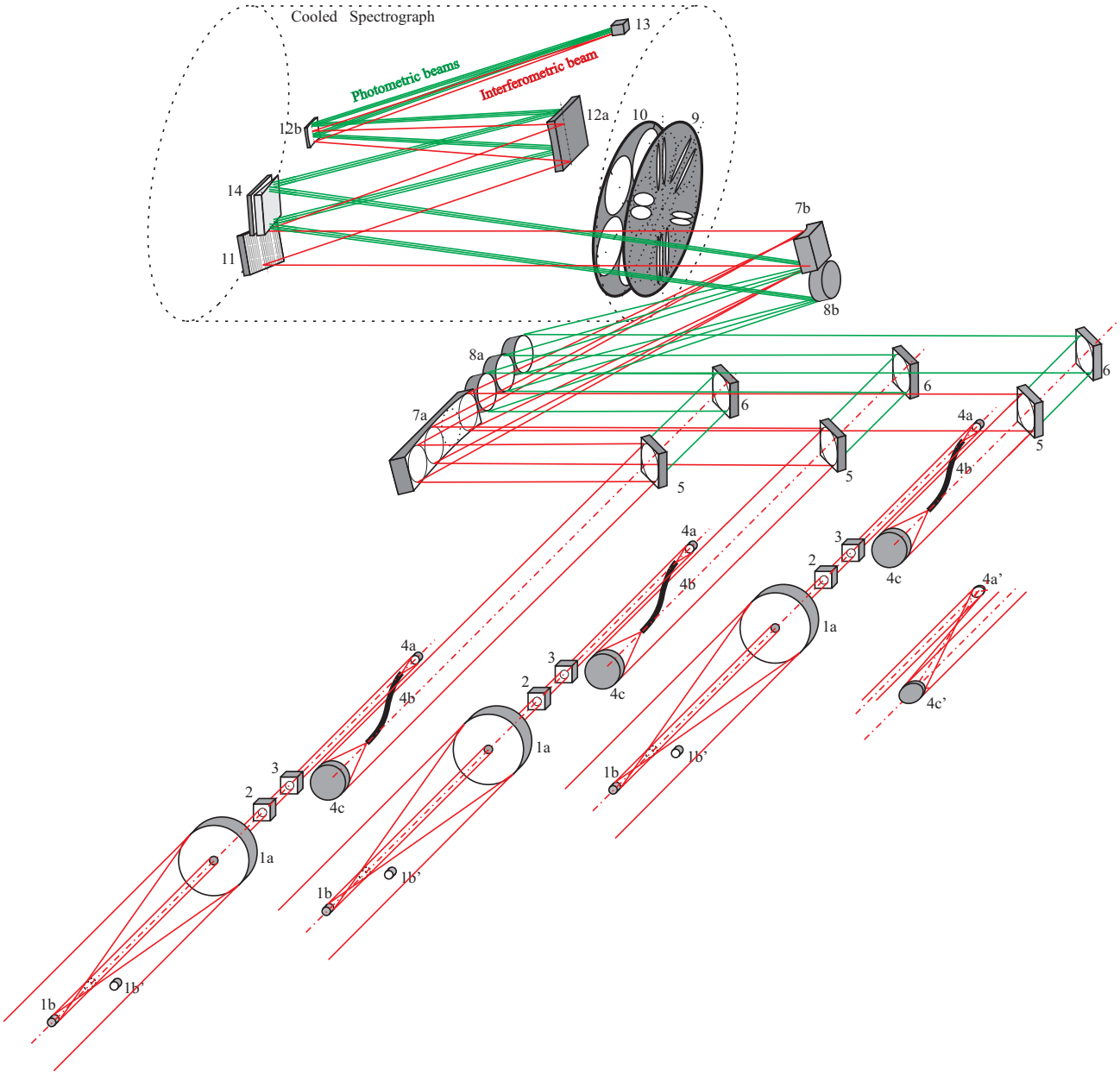

Figure 1*: Preliminary optical layout of AMBER. An afocal system (1) is used to compress the incoming beams. Babinet-like prisms (2) intend to correct the difference in polarization which might be introduced in the different beams by non homogeneities of the coatings. A second set of prisms (3) may correct chromatic effects such as the atmospheric dispersion and/or differential refraction. The key feature (4) of the AMBER instrument is an off-axis parabola that feeds a short optical fiber acting as a spatial filter and isolating a single coherent mode. Second off-axis parabolae produce parallel beams which are reflected on beamsplitters (5), the first part of the beam combiner. The two closest beams are almost tangent and the third one is two beam diameters away (center to center) from the second one. These beams produce superimposed Airy disks and each pair of pupils will produce a set of fringes. Due to the non redundant spacing of the pupils, this set of fringes can be discriminated by their spatial frequency. An anamorphotic system (7) made of a pair of cylindrical mirrors in an afocal combination compresses the beam orthogonally to the fringes. The flat mirrors (6,8) convey the photometric beams used for calibration of atmospheric fluctuations. Cold stops on a wheel (9) and a filter wheel (10) are located at a pupil position. The light is then dispersed by a grating (11). A compact spectrograph design requires two chamber mirrors (12). The detector (13) will probably be 1024×1024 HAWAII Rockwell array. With three telescopes, the fringes are analyzed within a strip of $12 \times n$ pixels, where n is the number of spectral channels ($n < 1024$). The photometric beams are slightly dispersed by a fixed prism (14) to take into account the chromatic variations of the Strehl ratio and the spatial filter efficiency. For some objects, we plan to use the $2''$ non-vignetted field available in the VLTI laboratory. This is achieved by replacing the spatial filter unit by an afocal system without spatial filter (4a', 4c') which maintains the direction of the output beam but divides its diameter by two. The figure roughly respects the proportion between the elements. The size of the spectrograph is 45 cm $\times$ 30 cm.*

Table 1*: Scientific characteristics for AMBER*

Target	Visibility Accuracy	Minimum K magnitude	Wavelength coverage	Spectral resolution	Polarisation useful	3 beams useful	Wide-field useful
Exozodi / Hot exoplanets	10^{-4}	5	K	50	N	N	Y / N
Star forming regions	10^{-2}	7	JHK+lines	1000	Y	Y	Y
AGN dust tori	10^{-2}	11	K	50	Y	Y	Y
Circumstellar matter	10^{-2}	4	JHK+lines	1000	Y	Y	Y
Binaries	10^{-2}	4	K	50	N	N	Y
Stellar structure	10^{-4}	1	lines	10000	N	Y	N

should reach 0.5 for the Unit Telescopes in the K band and should remain as high as 0.25 for reference stars of magnitude $V \approx 15$. The optical path differences between the beams are compensated by an ESO fringe tracker. Thanks to the dual field, wavefront correction and fringe stabilization can be performed on a star up to 25 arcseconds away from the scientific target.

The compressed pupil after the cylindrical optics has the same shape whatever the number of telescopes. We plan to use the same spectrograph and detector in all cases. Therefore, increasing the number of telescopes from two to three, and then to four requires only the addition of one incoming beam with the corresponding optics and the modification of the anamorphotic system without changing anything in the already existing beams.

The effect of the spatial filter is to reduce the wavefront perturbations to a flux variation in the fiber. If these photometric fluctuations are measured with a good precision, and, if the fringe exposure times are short enough, the FLUOR experiment demonstrated that the fringe visibility can be measured with no experimental bias. The spatial filter and the photometric calibration are therefore the condition to measure visibilities with extremely high accuracy (our ambitious target is 10^{-4}) on relatively bright sources (up to $K \approx 9$). With the spatial filter, the instrument has a field limited by the size of the Airy disk of the individual telescopes.

4. Expected performances

At this stage of the project, this parameter is still subject to several uncertainties linked to exact specifications of optics throughput, detector and electronics characteristics, as well as fringe tracker and adaptive optics performance. At present (see Table 2), we estimate that AMBER coupled to the VLT UT telescopes should allow us to reach when a bright star reference is available $K \lesssim 20$ in broad band and $K \lesssim 15$ at a resolution of 1000. When the interferometer uses the object as a reference, the limiting magnitude is rather $K \lesssim 14$. At the 1.8-m AT telescopes these limits drop by about 2.7 mag.

Upper parts of Table 2 give the limiting magnitudes of AMBER when the instrument detects fringes on the scientific source (self-reference mode). These numbers would also be the limits for the fringe sensor (e.g. the ESO/OCA Prototype Fringe Sensor Unit equiped with PICNIC detector with 18 electrons read out noise, Rabbia et al. 1996). In this mode, AMBER can detect fringes with $\lambda/4$ accuracy on stars up to $K = 14$ with 25-ms exposure time. For stars brighter than $K = 9.7$, the fringes can be detected at $\lambda/40$ accuracy with 4-ms exposure time. In this self-referencing mode, the limiting magnitudes are valid for all spectral resolutions.

The dual field allows for off-axis reference stars. The limiting magnitude for these references are the same as the ones quoted above. Second parts of Table 2 give the limiting magnitudes on the science object in order to reach a 1% visibility accuracy within 4 hours of observation sliced into 100 second individual exposures.

These numbers are given for poorly resolved objects producing maximum fringe contrast in the fringe sensing spectral band. A 0.1 object visibility would lead to a 2.5 mag penalty.

5. Organization

5.1. Institutes involved

The AMBER consortium is composed of four institutes:

- Laboratoire d'Astrophysique, Observatoire de Grenoble (LAOG, France).
- Observatoire de la Côte d'Azur (OCA, France)
- Osservatorio Astrofisico di Arcetri in Firenze (OAA, Italy)
- Max-Planck-Institut für Radioastronomie in Bonn (MPIfR, Germany).

Other institutes provide expert scientists or engineers but do not build or integrate hardware. They are:

- Institut de Recherche en Communications Optiques et Microondes in Limoges (IRCOM, France)
- Université de Nice - Sophia Antipolis (France)
- Office National d'Études et de Recherches Aerospatiale in Paris (ONERA, France),
- Centre de Recherche Astronomique de Lyon (CRAL, France).

5.2. Project structure

The AMBER project includes a principal investigator (PI: R. Petrov OCA), a project scientist (PS: F. Malbet LAOG), a chairman of the science group (SGC: A. Richichi OAA), a project manager (PM: P. Kern LAOG),

Table 2: *Expected limiting magnitude for two UTs (left) and two ATs (right). See text for details.*

	Two UTs			
Fringe accuracy	$\lambda/4$		$\lambda/40$	
Self-reference	14		9.7	
Spectral resolution	Broad-band	100	1000	10000
Off-axis reference	20.7	17.7	15.2	12.7

	Two ATs			
Fringe accuracy	$\lambda/4$		$\lambda/40$	
Self-reference	11.3		7	
Spectral resolution	Broad-band	100	1000	10000
Off-axis reference	18	15	12.5	10

a system engineer (SE: S. Ménardi OCA) and a co-investigator (CoI: K.-H. Hofmann MPIfR). AMBER has been divided in a set of working groups, each one in charge of one AMBER subsystem.

The science group (SGR) includes scientists working on star formation, galaxies and AGN, exoplanets, low-mass stars, AGB stars, Be stars and circumstellar matter. SGR is a natural follow-up of the original ESO ISAC committee, and similarly to the science groups of the other VLTI instruments, it has the specific task of identifying and prioritizing the key targets for AMBER, in order to maximize the scientific return expecially during early operations. The project scientist (PS) is in charge of translating the scientific needs in terms of instrument specifications. He is helped by an interferometry group (IGR), for interferometry offers a large range of observing modes and procedures, whose priorities must be analyzed and specified by specialists.

The subsystem working groups of the AMBER instrument are:

- Optomechanics
- Cooled spectrograph
- Detector and associated electronics
- Instrument control (VLTI interface included)
- Observations support (observation preparation, data reduction)
- Testing, integrating equipment and perfomance tests.

5.3. Budget

Many elements still have to be defined in the present system definition phase. Therefore, the final budget cannot be perfectly defined before the the Preliminary Design Review (PDR) in November 1998. The estimated final budget for the hardware of the infrared part of AMBER for two beams (phase 1) is 4 MF $\pm$10%. Extension to three beams and to visible wavelengths (phase 2) require additionally 4 MF $\pm$30% including the adaptive optics modules for two ATs (1 MF each).

5.4. Timetable

The preliminary and still approximate general timetable combines the planning for each subsystem and integrates them in a general planning with the following important dates:

- July 1998: Full definition of the project (Final Concept Review). Hard points have been identified and a concept has been selected.
- November 1998: Preliminary Design Review. Hard points have been solved, detailed system analysis is finished. All interfaces are analyzed. Precise timetable is known.
- April 1999: Final Design Review. All orders can be issued.
- July 2000: Manufacturing and Integration Review. All subsystems have been integrated and tested and it is possible to start the global integration and tests.
- December 2000: Shipment to Paranal where after 3 months of laboratory and siderostat tests on site, we expect to start observaitons.
- April 2001: Observations with the UTs.

Note:
The AMBER documentation is available on the following Web site: `http://www-laog.obs.ujf-grenoble.fr/amber`

References

[1] Coudé du Foresto V., Ridgway S. 1991, FLUOR: a Stellar Interferometer Using Single-Mode Infrared Fibers. In: Beckers J., Merkle F. (eds.) Proc. ESO conf., High-resolution imaging by interferometry II. ESO, Garching, 731

[2] Coudé du Foresto V., Perrin G., Mariotti J.-M., Lacasse M., Traub W. 1996, The FLUOR/IOTA Fiber Stellar Interferometer. In: Kern P., Malbet F. (eds) Proc. AstroFib'96, Integrated Optics for Astronomical Interferometry. Bastianelli-Guirimand, Grenoble, p. 115

[3] Coudé du Foresto V. 1996, Fringe Benefits: the Spatial Filtering Advantages of Single-Mode Fibers. In: Kern P., Malbet F. (eds) Proc. AstroFib'96, Integrated Optics for Astronomical Interferometry. Bastianelli-Guirimand, Grenoble, p. 27

[4] Malbet F., Coudé du Foresto V., Mékarnia D., Petrov R., Reynaud F., Tallon M. 1997a, *Étude préliminaire de l'instrument proche-infrarouge / rouge du VLTI et de GI2T*, available on the AMBER Web (AMB-REP-001).

[5] Malbet F., Perrin G., Petrov R., Richichi A., Schöller M. 1997b, *AMBER Report 2 – The imaging and spectroscopic VLTI focal instrument*, available on the AMBER Web (AMB-REP-002).

[6] Mourard D., Tallon-Bosc I., Blazit A., Bonneau D., Merlin G., Morand F., Vakili F., Labeyrie A. 1994, A&AS 283, 705

[7] Petrov R., Malbet F., Antonelli P., Feautrier Ph., Gennari S., Kern P., Lisi F., Monin J.-L., Mouillet D., Puget P., Richichi A., Rousset G. 1998, *AMBER, The near infrared / red VLTI focal instrument*, Report for the Steering Committee meeting, 30 January 1998. Available on the AMBER Web (AMB-REP-003).

[8] Rabbia Y., Ménardi S., Reynaud F., Delage L. 1996, The ESO-VLTI Fringe Sensor. In: Kern P., Malbet F. (eds) Proc. AstroFib'96, Integrated Optics for Astronomical Interferometry. Bastianelli-Guirimand, Grenoble, p. 175